AQUAPERLA

SHOWER MIXER TAP

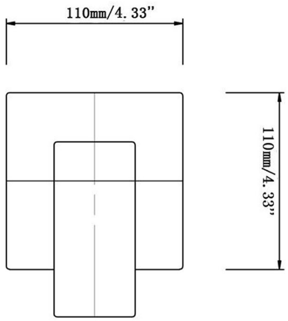

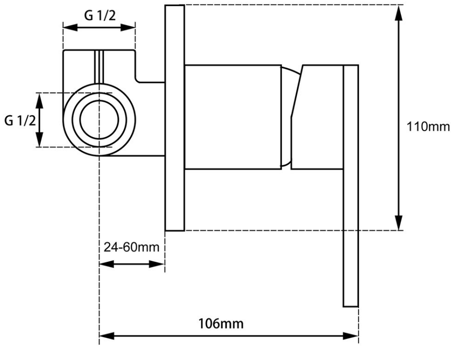

SPECIFICATIONS

Recommended use	Domestic, hotel and commercial
Colour availability	Chrome/Black
Pressure rating	Maximum operating pressure 1000kPa Note: For best performance and longer life we recommend 300-800kPa
Temperature rating	Maximum hot temperature 80℃，Min 5℃
Suitable Hot Water Units	Storage tank: Yes Continuous flow: Yes Gravity Feed: Not recommended
Standards	AS/NZS 3718

CLEANING RECOMMENDATIONS

This product should not be cleaned with abrasive materials. Damage caused by any improper treatment is not covered by the product warranty - refer to Warranty Conditions on the last page.

Disclaimer: Products in this specification manual must by regulation be installed by licensed and registered trade people. The manufacturer/distributor reserves the right to vary specifications or delete models from their range without prior notification. Dimensions are nominal measurements only. Dimensions and set-outs listed are correct at time of publication however the manufacturer/distributor takes no responsibility for printing errors.

WaterMark™

AQUAPERLA

SHOWER MIXER TAP

INSTALLATION INSTRUCTIONS

Important Note:

Mixer must be installed to the requirements of AS/NZS 3500 by a qualified plumber. Your mixer comes to you already factory assembled and tested. We do not recommend the dismantling of any internal part of the mixer. The mixers are factory tested and sealed so as to give the best performance.

Installation Procedure

1.Please flush out new pipe work prior to connecting the new mixer.
2.All mixers should be installed with isolating stop cocks (Arco).
3.In some areas where the incoming water exceeds 500 kPa, an approved pressure limiting device must be installed. Equal pressure or hot and cold water supply is required for this single level mixer.
4.Mixers are recommended for use on mains pressures and instantaneous systems only.
5.During installation protect the exposed surface finish by using the plastic cover provided.
6.In a typical installation, the mixer is mounted on a timber/metal noggin and secured using suitable screws through the mounting lugs.

NOTE: Arrow stamped on the outlet must face up towards shower. If the mixer is to be usedd as a bath mixer, the pipe will need to be looped to go to the bath outlet.

7.Connect mixer to hot and cold water supply.
8.Pressure check all connections. Lecking joints are not covered by the warranty.
9.When the wall is finished (eg. tiling), remove the protective cover and fit the cover plate and handle.

SERVICING - Replacement of Cartridge
1.Remove decorative cover and unscrew the grub screw from handle.
2.Lift off Handle, remove diverter handle, cover plate and Cartridge Lock Nut.
3.Lift out Cartridge and replace with new.

EXPLODED VIEW
Item Description
1. Mixer Body
2. Cartridge Sleeve
3. Cartridge
4. Cartridge Lock Nut
5. Cover Dome
6. Cover Plate
7. Grub Screw
8. Decorative Cover
9. Handle
10. Washer
11. Allen Key

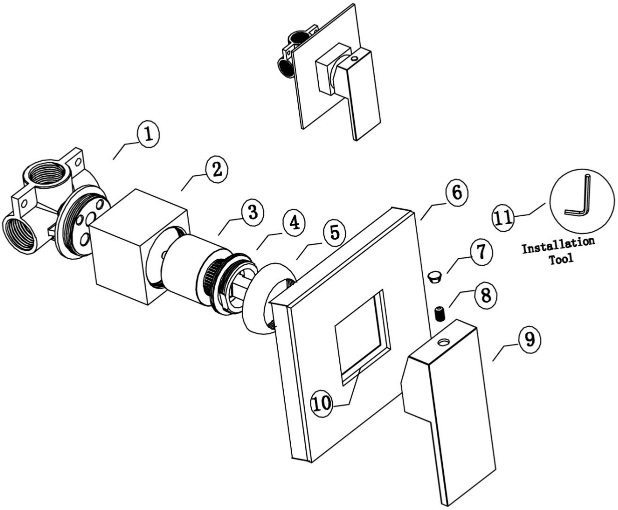

Warranty

Aquaperla Pty Ltd ABN: 41 639 357 789 is responsible for warranties.

Product Care+Cleaning Instructions

- Under no circumstances should tapware and accessories be installed using silicone or acetone products.
- Never use harsh detergents or acids, citrus based cleaner, or abrasive cleaners on any products, as these will scratch the surface.
- Where the tapware and accessories are in dry areas, use a soft cloth to remove surface dust. Alternatively, a wipe over with warm soapy water is all that is required to maintain the finish.
- Use of wax-based furniture cream should be avoided as these can result in a build up of deposits, which could detract the appearance.
- Do not store oxidising chemicals inside vanity cabinets or under sinks (it can cause mixer hoses to burst).

Australian Consumer Law

Our products come with guarantees that cannot be excluded under the Australian Consumer Law. You are entitled to a replacement or refund for a major failure and compensation for any other reasonably foreseeable loss or damage. You are also entitled to have the goods repaired or replaced if the goods fail to be of acceptable quality and the failure does not amount to a major failure.

Warranty can be made through:-
(a) Aquaperla Pty Ltd or one of its main offices in Australia, or through approved distributors of Aquaperla Pty Ltd Products.
(b)An approved distributor (This will be where you bought your product).
All goods are to be checked within 48 hours of being received. Any claim for shortages and /or breakages will be waived if you do not lodge a claim in writing to service@aquaperla.com.au within 48 hours of receiving goods. Claims for shortages or damages will not be recognised if deliveries are made by a third party organised by the retailer.
Goods returned due to change of mind or cancelled orders will incur a 20% restocking fee. It is the responsibility and expense of the buyer to arrange the return of the product to Aquaperla Pty Ltd. Goods returned must be in original packaging and in saleable condition for credit to be applied. Aquaperla Pty Ltd reserves the right to refuse returns on specialised orders.

Warranty Periods

In addition, available to you under the law, Aquaperla Pty Ltd will provide from the date of purchase of the product:-
(a)The product you receive is of good quality regarding the manufacturing.
(b)The finish of the product is of good quality and is of consistent colour.
(c)When the product contains a cartridge, aerator or water restrictor, warranty will only repair the part that is deemed defective after the first 12 months from date of receipt of purchase. After 12 months the removal and installation of the repaired part or replacement part will not be the responsibility of Aquaperla Pty Ltd.
(d)Where Aquaperla Pty Ltd repairs or replaces a part or product this will not start a new warranty period. The remainder of the products initial warranty term will apply.
(e)All chrome tapware has a warranty period including the finish for 7 years.
(f)All other finishes come with a conditional 12 month warranty as stated in this warranty.

Warranty Exclusions

Subject to Australian Consumer Law:-
(a)Warranty will not apply to any product that has been sold from a display or used as a display product from any retailer and or authorised distributor.
(b)When Aquaperla Pty Ltd did not sell the product to an authorised distributor and the proof of purchase is not of the authorised distributor or reseller.
(c)The Consumer is not able to provide proof of purchase from the authorised distributor or reseller or is not the original owner as the warranty is not transferrable.
(d) Products are not installed by a licenced plumber, or a person qualified to do the work required.
(e)Products are not installed as per the guideline and or the installation manuals.
(f)Damage to the relevant product is caused by accident, abuse, misuse, maltreatment, negligent use, improper or unusual installation, installation by accredited and licenced service provider or technician, abnormal stress or strain, unusual physical or environmental conditions, or neglect of any kind of the relevant products.
(g)Water pressures exceed stated limitations as per the product installation instructions; (A) Note: AS/NZA 3500.1-2003

(Clause 3.3.4) specifies 150kPA minimum and 500kPa maximum water supply pressure at any outlet within a building for new installations; (B) Note: The 150KPA minimum and 500kPa maximum water supply pressure does not apply to fire service outlets.
(h)The product is installed outside where it is open to salt or dust corrosion unless stated in a written warranty from Aquaperla Pty Ltd at time of purchase.
(i)Repair or replacement works have been undertaken on the relevant product without prior approval by Aquaperla Pty Ltd, or works are undertaken by a non-approved service provider before written approval has been given.
(j)Water flow regulators or non-approved parts connected to any part of the product.
(k)Damage to the product due to not using approved cleaning methods.
(l)Damage caused by cleaning with inappropriate cleaning products.
(m)Damage to the relevant product is from fair wear and tear, including but not limited to: (A) working seals in the inlet and outlet valves; (B) abrasions from regular use; (C) discolouration from regular use; (D) fading from light exposure.
(n)Damage caused by salt water or proximity to salt water and or fading caused by salt water.
(o)Any modifications made to any product.
(p)Damage to the relevant product is as a result of obstructions due to inadequate flushing of system before use, or problems caused by water supply (including silt, thread tape, silicone, copper shavings, corrosion and excess water pressure).
(q)Damage to products is caused by harsh detergents or abrasive cleaners.
(r)Flow regulators in tapware or showers, or regulated check valves in hand showers are removed or not installed.
(s)The manufacturers' care and maintenance instructions in relation to the relevant product are not observed.
(t)Tank water must have a water filter installed between the water tank and the first intake of the building which supplies water to the complete building.
(u)Where a product fails, and leaks water and the water supply cannot or is not immediately shut off at the isolation cock or cocks and is turned back on before all the service work is completed.
(v)Claims where a ceramic cartridge is included in the products, the product has malfunctioned due to the presence in the water supply of: (A) copper tube pieces; (B) sand, dirt or stones; (C) thread tape, or (D) other objects not normally presented in potable water supplies.
(w)Claims from waterproofing membranes to the product without using the correct protection under the Australian Standard AS3740-1994 set for waterproofing and would have not occurred if this standard was met.

Responsibilities

On receiving delivery of the product, it is the Consumers responsibility to ensure:-
(a) the product is not damaged prior to installation.
(b) the Consumer is happy with their purchase.
(c) the product has all its components and are included in the packaging; and
(d) installation and required and appropriate maintenance is performed by a suitably qualified tradesperson.
(e) the package or box is in good condition and the contents has not been tampered with or replaced.

Warranty Claims

If a Consumer makes a valid claim under the Warranty Exclusions (above) and none of the exclusions set out in the above, Aquaperla Pty Ltd will, at its discretion:
(a)repair the relevant part of the product; or
(b)replace the relevant part of the product with a product of identical specification, or where the product is superseded or no longer in stock, with a product of as close a specification as possible free of charge.
(c)Products presented for repair may be replaced by refurbished products of the same type rather than being repaired. Refurbished parts may be used to repair the products.

Service Fee

a) To the extent permitted by law, and subject to your rights under the Australian Consumer Law, Aquaperla Pty Ltd will not be liable for any costs associated with the removal of any faulty product or part from any connection, fitting or otherwise, or the installation of any replacement product or part.
(b) Aquaperla Pty Ltd will not be liable for any claims for labour, additional products or parts associated with an alleged faulty product for repair work not approved in advance by Aquaperla Pty Ltd in writing. Aquaperla Pty Ltd requires adequate access to products, fittings and fixtures to undertake warranty repairs. Aquaperla Pty Ltd will not be responsible for any damage or costs (including consequential damage or costs) where adequate access to product fittings and fixtures is not accessible.

(c) Should any warranty claim be made and attended to by Aquaperla Pty Ltd or a Aquaperla Pty Ltd authorised service provider, and in the opinion of Aquaperla Pty Ltd or the service provider (a fully qualified plumber), the problem was from:-
(i) faulty installation;
(ii) use of the products in conjunction with products of another manufacturer; or
(iii) damage caused subject to the warranty exclusions set out at Warranty Exclusions (above), Aquaperla Pty Ltd reserves the right to charge a service fee for each service provider or Aquaperla Pty Ltd staff member attending the premises where products have been installed.
(a)If Aquaperla Pty Ltd is asked to see a product that has been damaged or because of coatings that the customer believe have failed, the product, or part of the product will be sent to a Metal Lab for testing. Once the text results are concluded, and a report has been given to both Aquaperla Pty Ltd, the customer and the retailer that sold the product then:-

(1)Aquaperla Pty Ltd will replace the product if found that their test has no Warranty Exclusions (above) found.
(2)Aquaperla Pty Ltd will also pay for the test of the product to any metal lab it sends the product to.
(3)If found that the test shows the product has failed under the fault of all the provisions under Warranty Exclusions, which include harsh chemicals, acids, silicones as set out in Warranty Exclusions (above), the test must be paid for by the person or persons that have asked for that said test to be carried out.

Consequential Loss

To the extent permitted by law, and subject to your rights under the Australian Consumer Law, Aquaperla Pty Ltd will not be liable to the Consumer for any loss, damage, injuries, actions, claims, costs or expenses arising out of the use of or reliance on the product, including but not limited to any loss or damage to furniture, floor coverings, walls, fixtures or any other reasonably foreseeable consequential loss of any kind caused by any defect in the products or their components. Consequential loss also covers any indirect loss, loss of use, loss of profits, funding or revenue, loss or reputation or goodwill, business interruption, increased operating costs or expenses, any special or indirect loss, and exemplary or punitive damages.

Faulty Product

Do not install the product if you believe the product is faulty in any way. If it is missing parts and not complete in the packaging, please do not install the product.
If the product has been installed and a fault has occurred, turn off all water supply to the product. If the product has pressured water turn the water off at the point before the tap and cease using the product. Contact either of the below branches so a service form can be arranged
You can receive a claim form from below distributors or your local retailer where the product was purchased from.

QLD Headoffice:
2/1 Tradewinds Court
Glenvale QLD 4350
Ph: 07 4633 4445

NSW Branch:
342 Chisholm Road
Auburn NSW 2144
Ph: 02 7801 4938

VIC Branch:
2/42-52 Arkwright Drive
Dandeong South, VIC 3175
Ph: 04 1210 5535

Once the consumer receives the claim form, please fill it in and email to service@aquaperla.com.au
Providing:-
(a) the name and model of the product.
(b) proof of purchase from retailer is necessary to claim, and retailers' proof of purchase (if required).
(c) a photo / video and description of the fault in question.
(d) handover documentation for new homes (if applicable); and
(e) proof of installation by a licensed plumber (if applicable) and / or proof of purchase
If the product has not been installed, please return it to the retailer you purchased the product from.

Warrany Period

*15 years replacement cartridges
*2 years replacement product or parts & labour

- All Aquaperla Pty Ltd products have a 12 month Commercial warranty. All products should be tested before handover date and apply from the date of invoicing.

15 ★★★★★ 15 YEAR WARRANTY